TECHNICAL INFORMATION

HSC High Sealed & Coupled

CASING

SIZE:	**168.27mm (6 5/8")**
NOMINAL WEIGHT:	**41.67 kg/m (28.00 lb/ft)**
WALL THICKNESS:	**10.59mm (0.417")**
THREADS PER INCH:	**5**

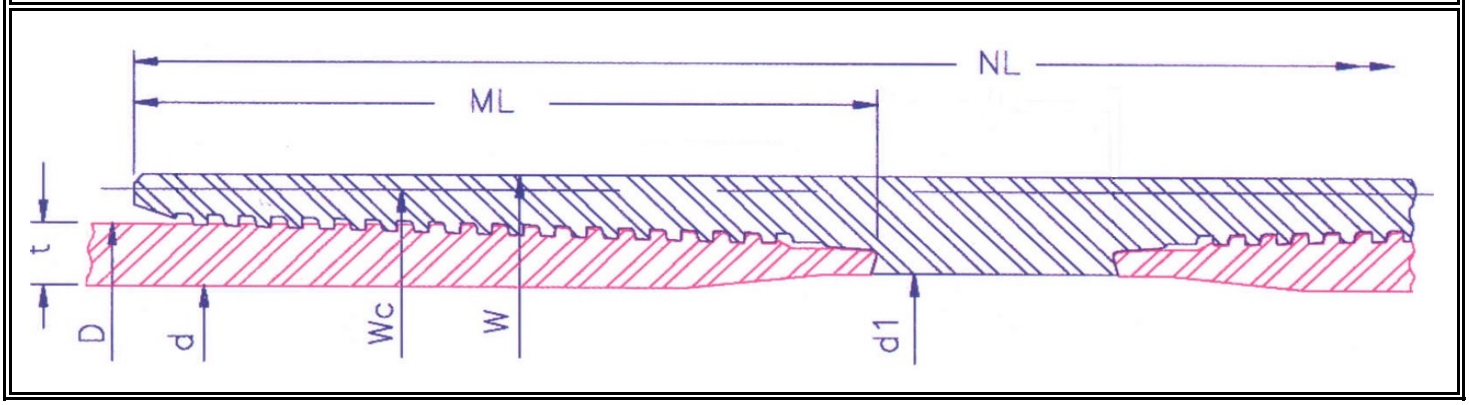

PIPE BODY	OUTSIDE DIA. (mm)	D	168.27	INSIDE DIA. (mm)		d	147.09	DRIFT DIA. (mm)		143.92	PLAIN END WT (kg/m)		41.15
	GRADE			55	N80	80	90	95	C110	110	C125	125	140	150
	COLLAPSE RESISTANCE (MPa)			42.6	56.3	56.3	61.2	63.6	70.1	70.1	75.8	75.8	80.8	83.6
	INTERNAL YIELD PRESSURE (MPa)			41.8	60.8	60.8	68.4	72.1	83.5	83.5	94.9	94.9	106.3	113.9
	BODY YIELD STRENGTH (kN)			1990	2894	2894	3256	3437	3979	3979	4522	4522	5065	5426
	ULTIMATE STRENGTH (kN)			3437	3618	3437	3618	3799	4160	4522	4703	4884	5426	5788
	YIELD TORQUE (N.m)			85250	124000	124000	139500	147250	170500	170500	193750	193750	217000	232500
MAKE UP	RECOMMENDED MAKEUP TORQUE USING A THREAD COMPOUND WITH FRICTION CORRECTION FACTOR OF 1.0													
	REGULAR (N.m)	MINIMUM		10620	11900	11900	12880	12880	13690	13690	14170	14170	15050	15860
		OPTIMUM		11800	13220	13220	14240	14240	15190	15190	15660	15660	16680	17630
		MAXIMUM		12980	14530	14530	15590	15590	16680	16680	17150	17150	18300	19390
	SPECIAL CLEARANCE (N.m)	MINIMUM		10620	11900	11900	12880	12880	13690	13690	14170	14170	15050	15860
		OPTIMUM		11800	13220	13220	14240	14240	15190	15190	15660	15660	16680	17630
		MAXIMUM		12980	14530	14530	15590	15590	16680	16680	17150	17150	18300	19390
CONNECTION	COLLAPSE RESISTANCE (MPa)			42.6	56.3	56.3	61.2	63.6	70.1	70.1	75.8	75.8	80.8	83.6
	INTERNAL YIELD PRESSURE (MPa)			41.8	60.8	60.8	68.4	72.1	83.5	83.5	94.9	94.9	106.3	113.9
	MAXIMUM LOAD OF COUPLING FACE (kN)	REGULAR		1745	2538	2538	2855	3013	3489	3489	3965	3965	4441	4758
		S.C.		641	933	933	1049	1107	1282	1282	1457	1457	1632	1749
				PARTING LOAD (kN)										
	REGULAR COUPLING			2859	3209	3085	3299	3469	3853	4102	4361	4486	4994	5333
	S.C. COUPLING			2080	2189	2080	2189	2298	2517	2736	2846	2955	3283	3502

		OUTSIDE DIA. (mm)	INSIDE DIA. (mm)	WEIGHT (kg)	JOINT EFFICIENCY (%)	30' JOINT MUD DISPLACEMENT (m^3)
COUPLING OUTSIDE DIAMETER	W	188.29	151.26	15.50	119	0.04951
	Wc	178.18	151.26	8.64	64	0.04864
COUPLING LENGTH (mm)	NL	300.46	The above information is for reference only. The information is subject to change or modification without notice. Please contact HSC for the latest information.			
MAKE UP LOSS (mm)	ML	126.11				