TECHNICAL INFORMATION

HSC High Sealed & Coupled

CASING

SIZE:	**168.27mm (6 5/8")**
NOMINAL WEIGHT:	**52.09 kg/m (35.00 lb/ft)**
WALL THICKNESS:	**13.34mm (0.525")**
THREADS PER INCH:	**5**

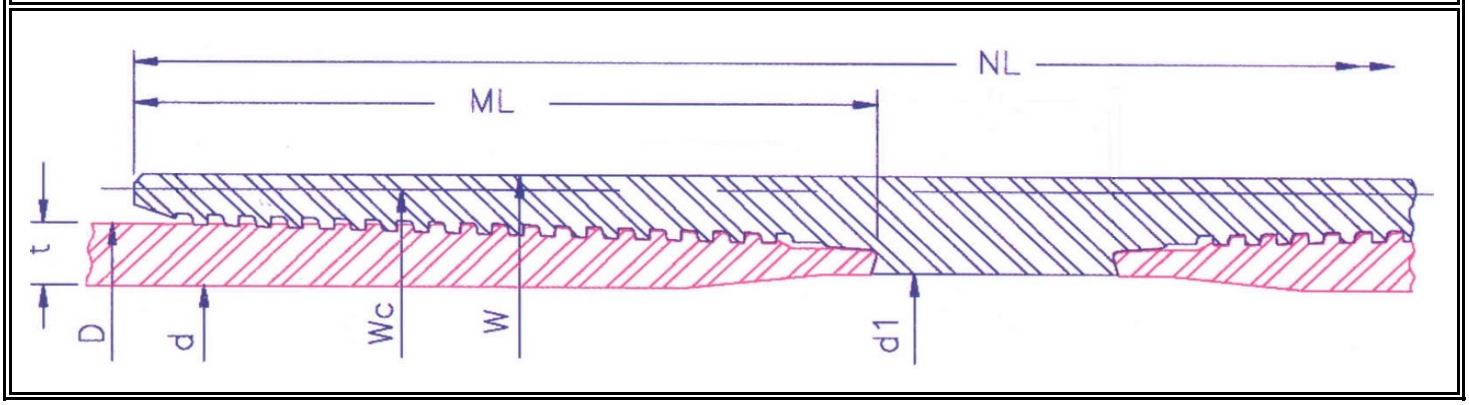

PIPE BODY	OUTSIDE DIA. (mm)	D	168.27	INSIDE DIA. (mm)		d	141.6	DRIFT DIA. (mm)		138.43	PLAIN END WT (kg/m)		50.9
	GRADE			55	N80	80	90	95	C110	110	C125	125	140	150
	COLLAPSE RESISTANCE (MPa)			55.3	80.5	80.5	90.6	95.6	109.4	109.4	121.3	121.3	132.6	139.8
	INTERNAL YIELD PRESSURE (MPa)			52.6	76.5	76.5	86.1	90.8	105.2	105.2	119.5	119.5	133.9	143.4
	BODY YIELD STRENGTH (kN)			2461	3580	3580	4028	4252	4923	4923	5594	5594	6265	6713
	ULTIMATE STRENGTH (kN)			4252	4475	4252	4475	4699	5147	5594	5818	6042	6713	7161
	YIELD TORQUE (N.m)			102120	148540	148540	167110	176390	204240	204240	232090	232090	259940	278510
MAKE UP	RECOMMENDED MAKEUP TORQUE USING A THREAD COMPOUND WITH FRICTION CORRECTION FACTOR OF 1.0													
	REGULAR (N.m)	MINIMUM		11900	13350	13350	14170	14170	15050	15050	15860	15860	16880	17840
		OPTIMUM		13220	14710	14710	15660	15660	16680	16680	17630	17630	18640	19700
		MAXIMUM		14530	16070	16070	17150	17150	18300	18300	19390	19390	20410	21570
	SPECIAL CLEARANCE (N.m)	MINIMUM		11900	13350	13350	14170	14170	15050	15050	15860	15860	16880	17840
		OPTIMUM		13220	14710	14710	15660	15660	16680	16680	17630	17630	18640	19700
		MAXIMUM		14530	16070	16070	17150	17150	18300	18300	19390	19390	20410	21570
CONNECTION	COLLAPSE RESISTANCE (MPa)			55.3	80.5	80.5	90.6	95.6	109.4	109.4	121.3	121.3	132.6	139.8
	INTERNAL YIELD PRESSURE (MPa)			52.6	76.5	76.5	86.1	90.8	105.2	105.2	119.5	119.5	133.9	143.4
	MAXIMUM LOAD OF COUPLING FACE (kN)	REGULAR		1745	2538	2538	2855	3013	3489	3489	3965	3965	4441	4758
		S.C.		641	933	933	1049	1107	1282	1282	1457	1457	1632	1749
				PARTING LOAD (kN)										
	REGULAR COUPLING			3537	3970	3816	4081	4291	4709	5074	5323	5528	6142	6552
	S.C. COUPLING			2080	2189	2080	2189	2298	2517	2736	2846	2955	3283	3502

		OUTSIDE DIA. (mm)	INSIDE DIA. (mm)	WEIGHT (kg)	JOINT EFFICIENCY (%)	30' JOINT MUD DISPLACEMENT (m^3)
COUPLING OUTSIDE DIAMETER	W	188.29	151.26	15.50	96	0.06070
	Wc	178.18	151.26	8.64	51	0.05983
COUPLING LENGTH (mm)	NL	300.46	The above information is for reference only. The information is subject to change or modification without notice. Please contact HSC for the latest information.			
MAKE UP LOSS (mm)	ML	126.11				