TECHNICAL INFORMATION

HSC High Sealed & Coupled

CASING

SIZE:	**177.80mm (7")**
NOMINAL WEIGHT:	**47.62 kg/m (32.00 lb/ft)**
WALL THICKNESS:	**11.51mm (0.453")**
THREADS PER INCH:	**5**

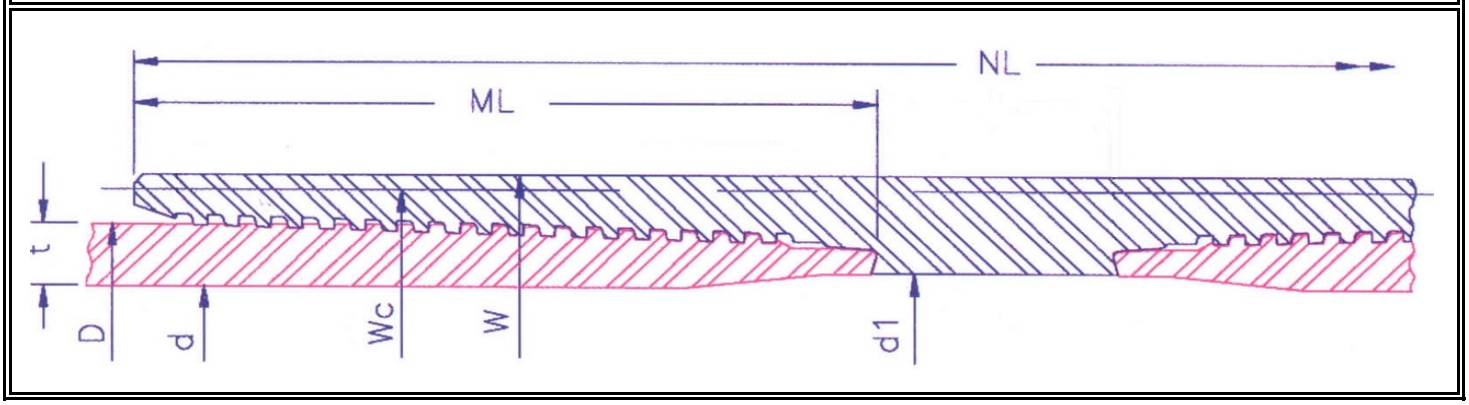

PIPE BODY	OUTSIDE DIA. (mm) D 177.8		INSIDE DIA. (mm) d 154.79			DRIFT DIA. (mm) 151.61			PLAIN END WT (kg/m) 47.13			
	GRADE		55	N80	80	90	95	C110	110	C125	125	140	150
	COLLAPSE RESISTANCE (MPa)		44.6	59.3	59.3	64.6	67.2	74.3	74.3	80.7	80.7	86.4	89.7
	INTERNAL YIELD PRESSURE (MPa)		42.9	62.5	62.5	70.3	74.2	85.9	85.9	97.6	97.6	109.3	117.1
	BODY YIELD STRENGTH (kN)		2279	3316	3316	3730	3937	4559	4559	5181	5181	5802	6217
	ULTIMATE STRENGTH (kN)		3937	4145	3937	4145	4352	4766	5181	5388	5595	6217	6631
	YIELD TORQUE (N.m)		102840	149580	149580	168280	177630	205670	205670	233720	233720	261760	280460
MAKE UP	RECOMMENDED MAKEUP TORQUE USING A THREAD COMPOUND WITH FRICTION CORRECTION FACTOR OF 1.0												
	REGULAR (N.m)	MINIMUM	11050	12410	12410	13350	13350	14170	14170	15050	15050	15860	16410
		OPTIMUM	12270	13760	13760	14710	14710	15660	15660	16680	16680	17630	18170
		MAXIMUM	13490	15120	15120	16070	16070	17150	17150	18300	18300	19390	19930
	SPECIAL CLEARANCE (N.m)	MINIMUM	11050	12410	12410	13350	13350	14170	14170	15050	15050	15860	16410
		OPTIMUM	12270	13760	13760	14710	14710	15660	15660	16680	16680	17630	18170
		MAXIMUM	13490	15120	15120	16070	16070	17150	17150	18300	18300	19390	19930
CONNECTION	COLLAPSE RESISTANCE (MPa)		44.6	59.3	59.3	64.6	67.2	74.3	74.3	80.7	80.7	86.4	89.7
	INTERNAL YIELD PRESSURE (MPa)		42.9	62.5	62.5	70.3	74.2	85.9	85.9	97.6	97.6	109.3	117.1
	MAXIMUM LOAD OF COUPLING FACE (kN)	REGULAR	1384	2013	2013	2264	2390	2767	2767	3145	3145	3522	3774
		S.C.	541	787	787	885	934	1082	1082	1229	1229	1377	1475
			PARTING LOAD (kN)										
	REGULAR COUPLING		3248	3660	3521	3769	3963	4405	4684	4987	5126	5708	6096
	S.C. COUPLING		2264	2383	2264	2383	2503	2741	2979	3098	3218	3575	3814

		OUTSIDE DIA. (mm)	INSIDE DIA. (mm)	WEIGHT (kg)	JOINT EFFICIENCY (%)	30' JOINT MUD DISPLACEMENT (m^3)
COUPLING OUTSIDE DIAMETER	W	195.10	161.04	14.98	98	0.05632
	Wc	187.71	161.04	9.52	61	0.05562
COUPLING LENGTH (mm)	NL	313.46	The above information is for reference only. The information is subject to change or modification without notice. Please contact HSC for the latest information.			
MAKE UP LOSS (mm)	ML	132.79				