TECHNICAL INFORMATION

CASING

SIZE:	**193.68mm (7 5/8")**
NOMINAL WEIGHT:	**44.20 kg/m (29.70 lb/ft)**
WALL THICKNESS:	**9.52mm (0.375")**
THREADS PER INCH:	**5**

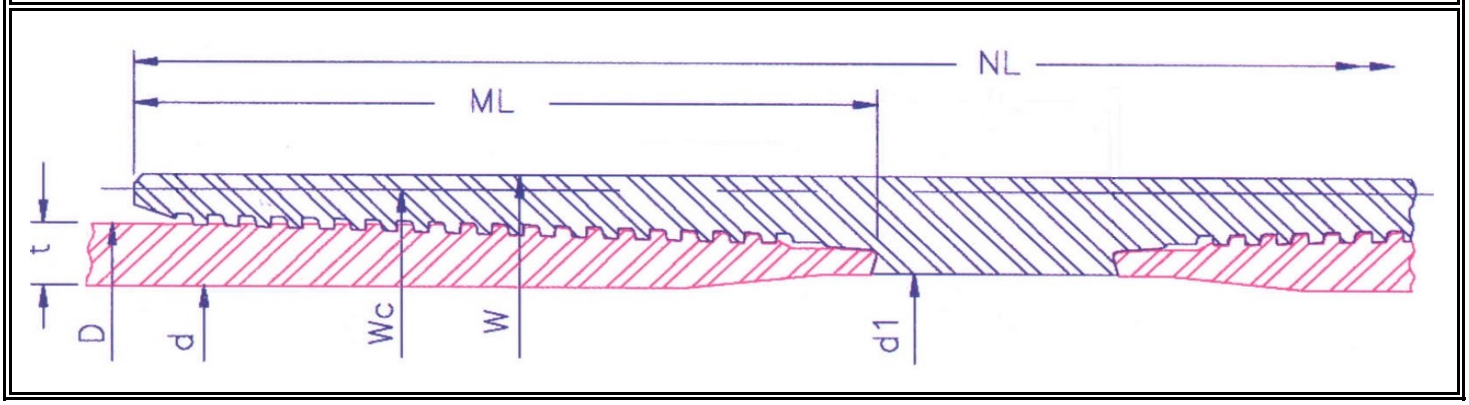

PIPE BODY	OUTSIDE DIA. (mm)	D	193.68	INSIDE DIA. (mm)		d	174.62	DRIFT DIA. (mm)		171.45	PLAIN END WT (kg/m)		43.22
	GRADE			55	N80	80	90	95	C110	110	C125	125	140	150
	COLLAPSE RESISTANCE (MPa)			27	33	33	34.7	35.4	36.9	36.9	39.1	39.1	40.8	41.7
	INTERNAL YIELD PRESSURE (MPa)			32.6	47.5	47.5	53.4	56.4	65.3	65.3	74.2	74.2	83.1	89
	BODY YIELD STRENGTH (kN)			2090	3039	3039	3419	3609	4179	4179	4749	4749	5319	5699
	ULTIMATE STRENGTH (kN)			3609	3799	3609	3799	3989	4369	4749	4939	5129	5699	6079
	YIELD TORQUE (N.m)			105900	154040	154040	173300	182920	211810	211810	240690	240690	269570	288830
MAKE UP	RECOMMENDED MAKEUP TORQUE USING A THREAD COMPOUND WITH FRICTION CORRECTION FACTOR OF 1.0													
	REGULAR (N.m)	MINIMUM		10130	11470	11470	12410	12410	13350	13350	14170	14170	15050	15520
		OPTIMUM		11250	12740	12740	13760	13760	14710	14710	15660	15660	16680	17150
		MAXIMUM		12380	14020	14020	15120	15120	16070	16070	17150	17150	18300	18780
	SPECIAL CLEARANCE (N.m)	MINIMUM		10130	11470	11470	12410	12410	13350	13350	14170	14170	15050	15520
		OPTIMUM		11250	12740	12740	13760	13760	14710	14710	15660	15660	16680	17150
		MAXIMUM		12380	14020	14020	15120	15120	16070	16070	17150	17150	18300	18780
CONNECTION	COLLAPSE RESISTANCE (MPa)			27	33	33	34.7	35.4	36.9	36.9	39.1	39.1	40.8	41.7
	INTERNAL YIELD PRESSURE (MPa)			32.6	47.5	47.5	53.4	56.4	65.3	65.3	74.2	74.2	83.1	89
	MAXIMUM LOAD OF COUPLING FACE (kN)	REGULAR		2194	3191	3191	3590	3790	4388	4388	4986	4986	5585	5983
		S.C.		958	1393	1393	1567	1654	1915	1915	2176	2176	2437	2611
				PARTING LOAD (kN)										
	REGULAR COUPLING			2934	3330	3207	3439	3616	4025	4271	4558	4681	5213	5567
	S.C. COUPLING			2934	3330	3171	3338	3505	3839	4172	4339	4506	5007	5341

		OUTSIDE DIA. (mm)	INSIDE DIA. (mm)	WEIGHT (kg)	JOINT EFFICIENCY (%)	30' JOINT MUD DISPLACEMENT (m^3)
COUPLING OUTSIDE DIAMETER	W	216.61	177.83	21.50	152	0.05262
	Wc	206.81	177.83	13.25	92	0.05157
COUPLING LENGTH (mm)	NL	322.45	The above information is for reference only. The information is subject to change or modification without notice. Please contact HSC for the latest information.			
MAKE UP LOSS (mm)	ML	137.31				