TECHNICAL INFORMATION

HSC High Sealed & Coupled

CASING

SIZE:	**193.68mm (7 5/8")**
NOMINAL WEIGHT:	**63.69 kg/m (42.80 lb/ft)**
WALL THICKNESS:	**14.27mm (0.562")**
THREADS PER INCH:	**5**

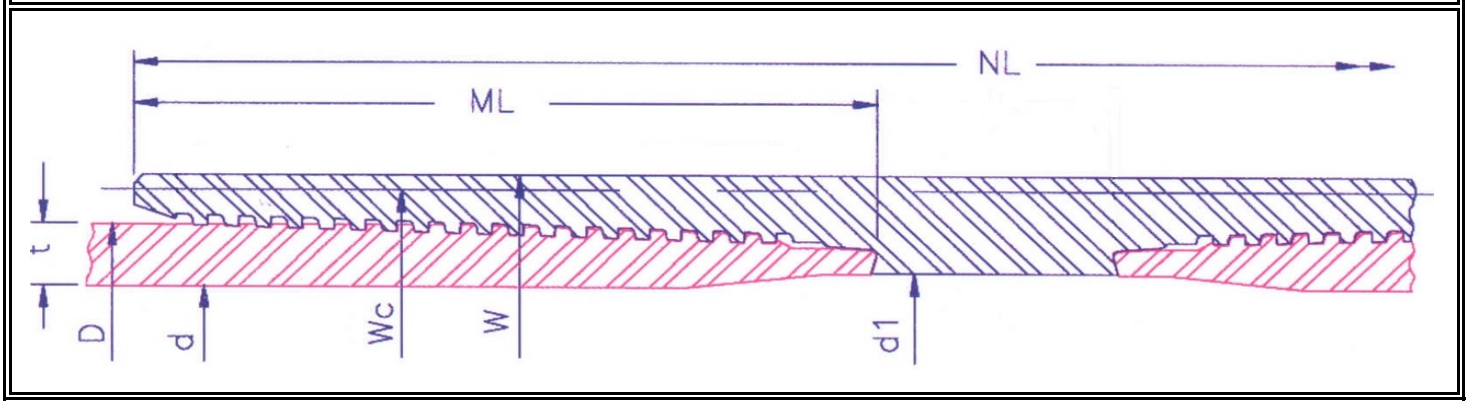

PIPE BODY	OUTSIDE DIA. (mm)	D	193.68	INSIDE DIA. (mm)		d	165.13	DRIFT DIA. (mm)		161.95	PLAIN END WT (kg/m)		63.08
	GRADE			55	N80	80	90	95	C110	110	C125	125	140	150
	COLLAPSE RESISTANCE (MPa)			51.8	74.6	74.6	82	85.6	96	96	105.8	105.8	115	120.7
	INTERNAL YIELD PRESSURE (MPa)			48.9	71.1	71.1	80	84.5	97.8	97.8	111.2	111.2	124.5	133.4
	BODY YIELD STRENGTH (kN)			3051	4438	4438	4992	5270	6102	6102	6934	6934	7766	8321
	ULTIMATE STRENGTH (kN)			5270	5547	5270	5547	5824	6379	6934	7211	7489	8321	8875
	YIELD TORQUE (N.m)			147280	214230	214230	241010	254390	294560	294560	334730	334730	374900	401680
MAKE UP	RECOMMENDED MAKEUP TORQUE USING A THREAD COMPOUND WITH FRICTION CORRECTION FACTOR OF 1.0													
	REGULAR (N.m)	MINIMUM		14710	16410	16410	17220	17220	18570	18570	19520	19520	19520	19520
		OPTIMUM		16200	18170	18170	19120	19120	20610	20610	21560	21560	21560	21560
		MAXIMUM		17690	19930	19930	21020	21020	22640	22640	23590	23590	23590	23590
	SPECIAL CLEARANCE (N.m)	MINIMUM		14710	16410	16410	17220	17220	18570	18570	19520	19520	19520	19520
		OPTIMUM		16200	18170	18170	19120	19120	20610	20610	21560	21560	21560	21560
		MAXIMUM		17690	19930	19930	21020	21020	22640	22640	23590	23590	23590	23590
CONNECTION	COLLAPSE RESISTANCE (MPa)			51.8	74.6	74.6	82	85.6	96	96	105.8	105.8	115	120.7
	INTERNAL YIELD PRESSURE (MPa)			48.9	71.1	71.1	80	84.5	97.8	97.8	111.2	111.2	124.5	133.4
	MAXIMUM LOAD OF COUPLING FACE (kN)	REGULAR		2194	3191	3191	3590	3790	4388	4388	4986	4986	5585	5983
		S.C.		958	1393	1393	1567	1654	1915	1915	2176	2176	2437	2611
				PARTING LOAD (kN)										
	REGULAR COUPLING			4284	4862	4682	5021	5280	5877	6236	6654	6834	7611	8129
	S.C. COUPLING			3171	3338	3171	3338	3505	3839	4172	4339	4506	5007	5341

		OUTSIDE DIA. (mm)	INSIDE DIA. (mm)	WEIGHT (kg)	JOINT EFFICIENCY (%)	30' JOINT MUD DISPLACEMENT (m^3)
COUPLING OUTSIDE DIAMETER	W	216.61	176.25	21.67	104	0.07549
	Wc	206.81	176.25	13.43	63	0.07444
COUPLING LENGTH (mm)	NL	322.45	The above information is for reference only. The information is subject to change or modification without notice. Please contact HSC for the latest information.			
MAKE UP LOSS (mm)	ML	137.31				