TECHNICAL INFORMATION

HSC High Sealed & Coupled

CASING

SIZE:	**193.68mm (7 5/8")**
NOMINAL WEIGHT:	**67.41 kg/m (45.30 lb/ft)**
WALL THICKNESS:	**15.11mm (0.595")**
THREADS PER INCH:	**5**

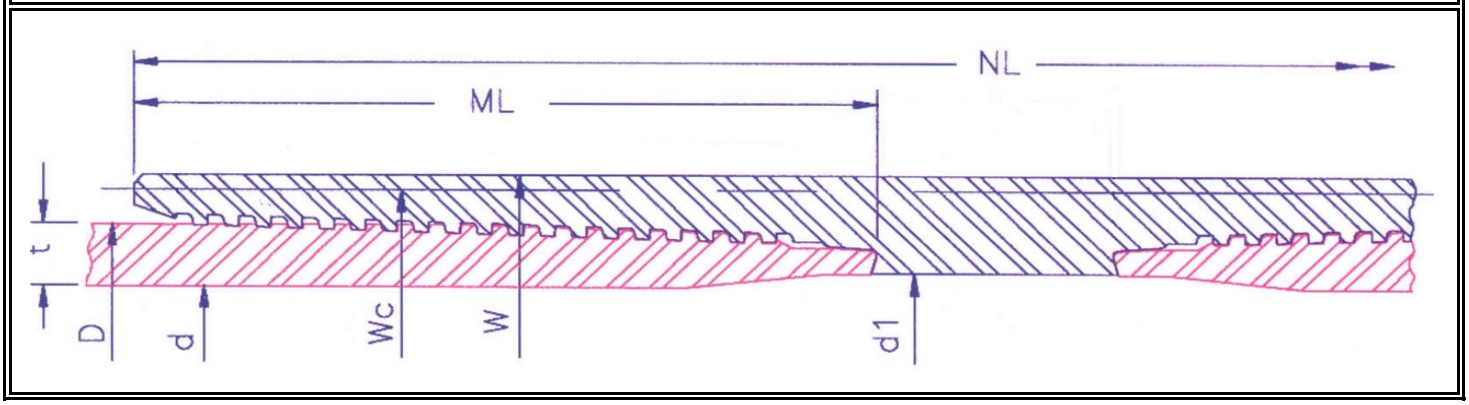

PIPE BODY	OUTSIDE DIA. (mm)	D	193.68	INSIDE DIA. (mm)		d	163.45	DRIFT DIA. (mm)		160.27	PLAIN END WT (kg/m)		66.48
	GRADE			55	N80	80	90	95	C110	110	C125	125	140	150
	COLLAPSE RESISTANCE (MPa)			54.6	79.4	79.4	89.3	94.2	106.5	106.5	117.9	117.9	128.8	135.7
	INTERNAL YIELD PRESSURE (MPa)			51.8	75.3	75.3	84.7	89.4	103.6	103.6	117.7	117.7	131.8	141.2
	BODY YIELD STRENGTH (kN)			3215	4676	4676	5261	5553	6430	6430	7307	7307	8183	8768
	ULTIMATE STRENGTH (kN)			5553	5845	5553	5845	6138	6722	7307	7599	7891	8768	9353
	YIELD TORQUE (N.m)			153880	223830	223830	251810	265790	307760	307760	349730	349730	391700	419680
MAKE UP	RECOMMENDED MAKEUP TORQUE USING A THREAD COMPOUND WITH FRICTION CORRECTION FACTOR OF 1.0													
	REGULAR (N.m)	MINIMUM		15050	16880	16880	17690	17690	18570	18570	19520	19520	19520	19520
		OPTIMUM		16680	18640	18640	19590	19590	20610	20610	21560	21560	21560	21560
		MAXIMUM		18300	20410	20410	21490	21490	22640	22640	23590	23590	23590	23590
	SPECIAL CLEARANCE (N.m)	MINIMUM		15050	16880	16880	17690	17690	18570	18570	19520	19520	19520	19520
		OPTIMUM		16680	18640	18640	19590	19590	20610	20610	21560	21560	21560	21560
		MAXIMUM		18300	20410	20410	21490	21490	22640	22640	23590	23590	23590	23590
CONNECTION	COLLAPSE RESISTANCE (MPa)			54.6	79.4	79.4	89.3	94.2	106.5	106.5	117.9	117.9	128.8	135.7
	INTERNAL YIELD PRESSURE (MPa)			51.8	75.3	75.3	84.7	89.4	103.6	103.6	117.7	117.7	131.8	141.2
	MAXIMUM LOAD OF COUPLING FACE (kN)	REGULAR		2194	3191	3191	3590	3790	4388	4388	4986	4986	5585	5983
		S.C.		958	1393	1393	1567	1654	1915	1915	2176	2176	2437	2611
				PARTING LOAD (kN)										
	REGULAR COUPLING			4515	5123	4934	5291	5564	6193	6571	7012	7201	8020	8566
	S.C. COUPLING			3171	3338	3171	3338	3505	3839	4172	4339	4506	5007	5341

		OUTSIDE DIA. (mm)	INSIDE DIA. (mm)	WEIGHT (kg)	JOINT EFFICIENCY (%)	30' JOINT MUD DISPLACEMENT (m^3)
COUPLING OUTSIDE DIAMETER	W	216.61	176.25	21.67	99	0.07937
	Wc	206.81	176.25	13.43	60	0.07831
COUPLING LENGTH (mm)	NL	322.45	The above information is for reference only. The information is subject to change or modification without notice. Please contact HSC for the latest information.			
MAKE UP LOSS (mm)	ML	137.31				