TECHNICAL INFORMATION

CASING

SIZE:	**244.48mm (9 5/8")**
NOMINAL WEIGHT:	**69.94 kg/m (47.00 lb/ft)**
WALL THICKNESS:	**11.99mm (0.472")**
THREADS PER INCH:	**5**

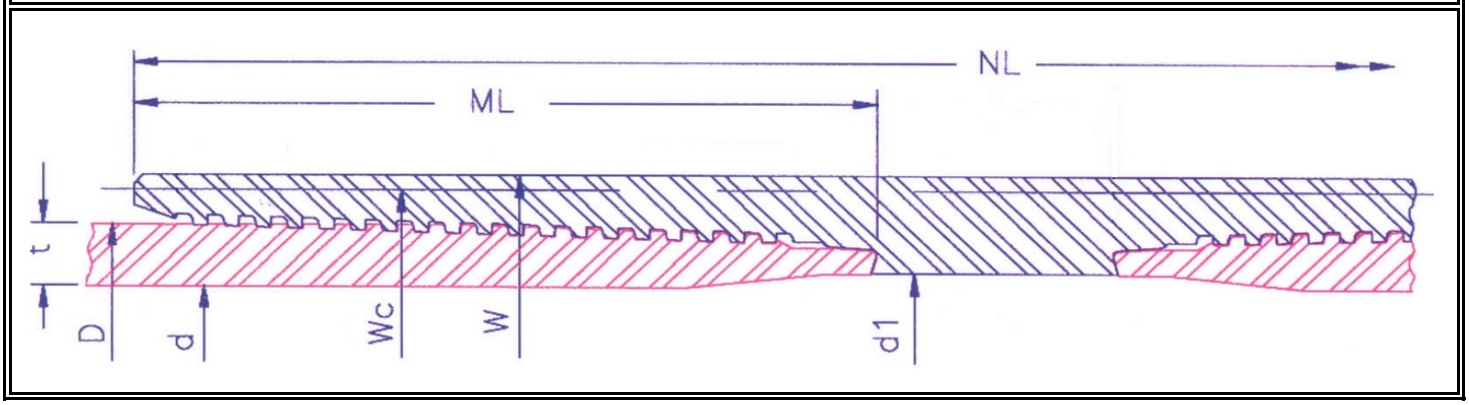

PIPE BODY	OUTSIDE DIA. (mm)	D	244.48	INSIDE DIA. (mm)		d	220.5	DRIFT DIA. (mm)		216.54	PLAIN END WT (kg/m)		68.66
	GRADE			55	N80	80	90	95	C110	110	C125	125	140	150
	COLLAPSE RESISTANCE (MPa)			26.8	32.8	32.8	34.4	35.1	36.5	36.5	38.8	38.8	40.6	41.4
	INTERNAL YIELD PRESSURE (MPa)			32.5	47.3	47.3	53.3	56.2	65.1	65.1	74	74	82.8	88.8
	BODY YIELD STRENGTH (kN)			3321	4830	4830	5434	5735	6641	6641	7547	7547	8452	9056
	ULTIMATE STRENGTH (kN)			5735	6037	5735	6037	6339	6943	7547	7848	8150	9056	9660
	YIELD TORQUE (N.m)			212480	309070	309070	347700	367020	424970	424970	482920	482920	540870	579500
MAKE UP	RECOMMENDED MAKEUP TORQUE USING A THREAD COMPOUND WITH FRICTION CORRECTION FACTOR OF 1.0													
	REGULAR (N.m)	MINIMUM		15050	17690	17690	19520	19520	19520	19520	19520	19520	19520	19520
		OPTIMUM		16680	19590	19590	21560	21560	21560	21560	21560	21560	21560	21560
		MAXIMUM		18300	21490	21490	23590	23590	23590	23590	23590	23590	23590	23590
	SPECIAL CLEARANCE (N.m)	MINIMUM		15050	17690	17690	19520	19520	19520	19520	19520	19520	19520	19520
		OPTIMUM		16680	19590	19590	21560	21560	21560	21560	21560	21560	21560	21560
		MAXIMUM		18300	21490	21490	23590	23590	23590	23590	23590	23590	23590	23590
CONNECTION	COLLAPSE RESISTANCE (MPa)			26.8	32.8	32.8	34.4	35.1	36.5	36.5	38.8	38.8	40.6	41.4
	INTERNAL YIELD PRESSURE (MPa)			32.5	47.3	47.3	53.3	56.2	65.1	65.1	74	74	82.8	88.8
	MAXIMUM LOAD OF COUPLING FACE (kN)	REGULAR		3216	4677	4677	5262	5554	6431	6431	7308	7308	8185	8770
		S.C.		1186	1725	1725	1941	2049	2372	2372	2695	2695	3019	3235
				PARTING LOAD (kN)										
	REGULAR COUPLING			4445	5163	4992	5381	5661	6331	6672	7171	7341	8181	8741
	S.C. COUPLING			3994	4204	3994	4204	4414	4835	5255	5465	5676	6306	6727

		OUTSIDE DIA. (mm)	INSIDE DIA. (mm)	WEIGHT (kg)	JOINT EFFICIENCY (%)	30' JOINT MUD DISPLACEMENT (m^3)
COUPLING OUTSIDE DIAMETER	W	270.51	227.25	30.95	134	0.08318
	Wc	257.61	227.25	17.12	73	0.08141
COUPLING LENGTH (mm)	NL	329.44	The above information is for reference only. The information is subject to change or modification without notice. Please contact HSC for the latest information.			
MAKE UP LOSS (mm)	ML	140.84				