TECHNICAL INFORMATION

CASING

SIZE:	**298.45mm (11 3/4")**
NOMINAL WEIGHT:	**69.94 kg/m (47.00 lb/ft)**
WALL THICKNESS:	**9.52mm (0.375")**
THREADS PER INCH:	**5**

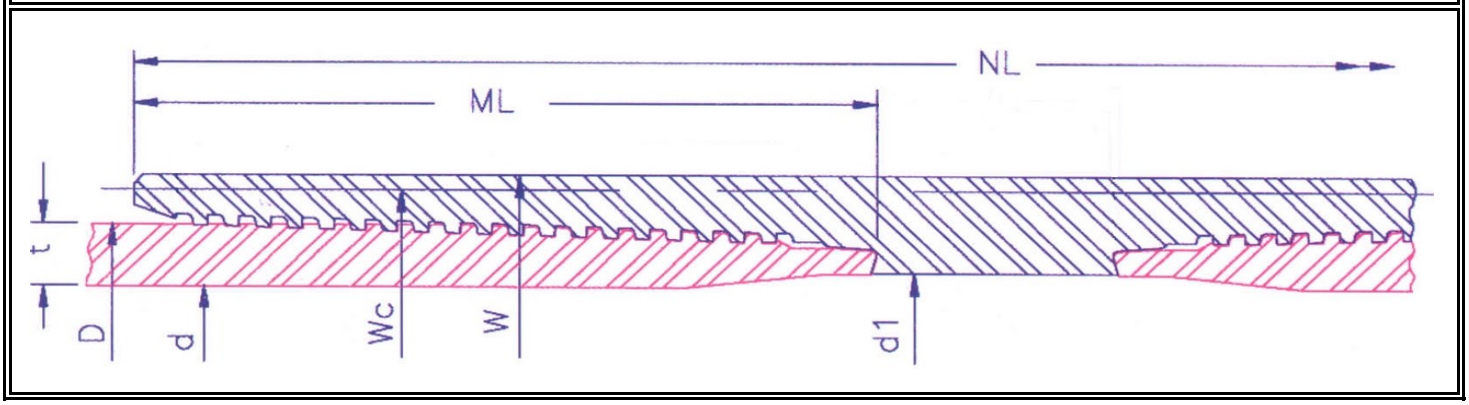

PIPE BODY	**OUTSIDE DIA. (mm)**	**D**	298.45	**INSIDE DIA. (mm)**		**d**	279.4	**DRIFT DIA. (mm)**	275.44	**PLAIN END WT (kg/m)**		67.8
	GRADE			**55**	**N80**	**80**	**90**	**95**	**C110**	**110**	**C125**	**125**	**140**	**150**
	COLLAPSE RESISTANCE (MPa)			10.4	11.2	11.2	11.2	11.2	11.2	11.2	11.2	11.2	11.2	11.2
	INTERNAL YIELD PRESSURE (MPa)			21.2	30.8	30.8	34.7	36.6	42.4	42.4	48.1	48.1	53.9	57.8
	BODY YIELD STRENGTH (kN)			3279	4769	4769	5365	5663	6557	6557	7451	7451	8345	8941
	ULTIMATE STRENGTH (kN)			5663	5961	5663	5961	6259	6855	7451	7749	8047	8941	9538
	YIELD TORQUE (N.m)			265010	385470	385470	433650	457740	530020	530020	602290	602290	674570	722750
MAKE UP	**RECOMMENDED MAKEUP TORQUE USING A THREAD COMPOUND WITH FRICTION CORRECTION FACTOR OF 1.0**													
	REGULAR (N.m)	**MINIMUM**		12880	15520	15520	17220	17220	18570	18570	19520	19520	19520	19520
		OPTIMUM		14240	17150	17150	19120	19120	20610	20610	21560	21560	21560	21560
		MAXIMUM		15590	18780	18780	21020	21020	22640	22640	23590	23590	23590	23590
	SPECIAL CLEARANCE (N.m)	**MINIMUM**		12880	15520	15520	17220	17220	18570	18570	19520	19520	19520	19520
		OPTIMUM		14240	17150	17150	19120	19120	20610	20610	21560	21560	21560	21560
		MAXIMUM		15590	18780	18780	21020	21020	22640	22640	23590	23590	23590	23590
CONNECTION	**COLLAPSE RESISTANCE (MPa)**			10.4	11.2	11.2	11.2	11.2	11.2	11.2	11.2	11.2	11.2	11.2
	INTERNAL YIELD PRESSURE (MPa)			21.2	30.8	30.8	34.7	36.6	42.4	42.4	48.1	48.1	53.9	57.8
	MAXIMUM LOAD OF COUPLING FACE (kN)	**REGULAR**		3873	5633	5633	6337	6689	7745	7745	8801	8801	9858	10562
		S.C.		1448	2106	2106	2369	2500	2895	2895	3290	3290	3685	3948
				PARTING LOAD (kN)										
	REGULAR COUPLING			4161	4963	4820	5226	5501	6181	6467	7005	7147	7971	8520
	S.C. COUPLING			4161	4963	4820	5145	5403	5917	6432	6689	6946	7718	8232

		OUTSIDE DIA. (mm)	**INSIDE DIA. (mm)**	**WEIGHT (kg)**	**JOINT EFFICIENCY (%)**	**30' JOINT MUD DISPLACEMENT (m^3)**
COUPLING OUTSIDE DIAMETER	**W**	324.41	282.14	37.66	165	0.08306
	Wc	311.61	282.14	20.99	91	0.08093
COUPLING LENGTH (mm)	**NL**	332.49	The above information is for reference only. The information is subject to change or modification without notice. Please contact HSC for the latest information.			
MAKE UP LOSS (mm)	**ML**	141.96				