TECHNICAL INFORMATION

CASING

SIZE:	**298.45mm (11 3/4")**
NOMINAL WEIGHT:	**96.73 kg/m (65.00 lb/ft)**
WALL THICKNESS:	**13.56mm (0.534")**
THREADS PER INCH:	**5**

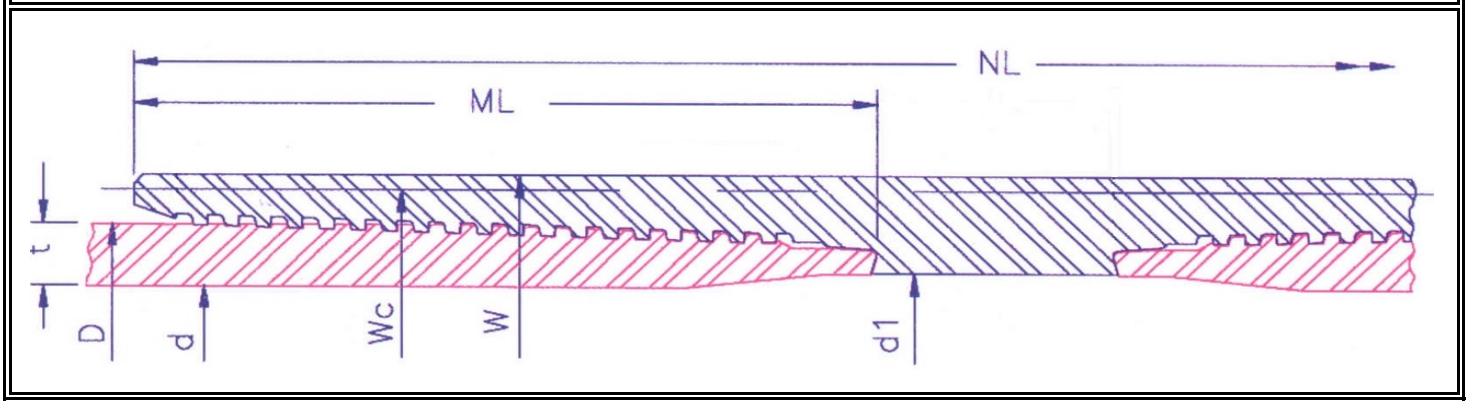

PIPE BODY	OUTSIDE DIA. (mm)	D	298.45	INSIDE DIA. (mm)		d	271.32	DRIFT DIA. (mm)		267.36	PLAIN END WT (kg/m)		95.2
	GRADE			55	N80	80	90	95	C110	110	C125	125	140	150
	COLLAPSE RESISTANCE (MPa)			22.7	26.7	26.7	27.9	28.8	30.8	30.8	32.3	32.3	33.1	33.3
	INTERNAL YIELD PRESSURE (MPa)			30.2	43.9	43.9	49.4	52.1	60.3	60.3	68.5	68.5	76.8	82.3
	BODY YIELD STRENGTH (kN)			4603	6696	6696	7533	7951	9207	9207	10462	10462	11718	12555
	ULTIMATE STRENGTH (kN)			7951	8370	7951	8370	8788	9625	10462	10881	11299	12555	13392
	YIELD TORQUE (N.m)			362200	526830	526830	592680	625610	724390	724390	823170	823170	921950	987810
MAKE UP	RECOMMENDED MAKEUP TORQUE USING A THREAD COMPOUND WITH FRICTION CORRECTION FACTOR OF 1.0													
	REGULAR (N.m)	MINIMUM		19520	19520	19520	19520	19520	19520	19520	19520	19520	19520	19520
		OPTIMUM		21560	21560	21560	21560	21560	21560	21560	21560	21560	21560	21560
		MAXIMUM		23590	23590	23590	23590	23590	23590	23590	23590	23590	23590	23590
	SPECIAL CLEARANCE (N.m)	MINIMUM		19520	19520	19520	19520	19520	19520	19520	19520	19520	19520	19520
		OPTIMUM		21560	21560	21560	21560	21560	21560	21560	21560	21560	21560	21560
		MAXIMUM		23590	23590	23590	23590	23590	23590	23590	23590	23590	23590	23590
CONNECTION	COLLAPSE RESISTANCE (MPa)			22.7	26.7	26.7	27.9	28.8	30.8	30.8	32.3	32.3	33.1	33.3
	INTERNAL YIELD PRESSURE (MPa)			30.2	43.9	43.9	49.4	52.1	60.3	60.3	68.5	68.5	76.8	82.3
	MAXIMUM LOAD OF COUPLING FACE (kN)	REGULAR		3873	5633	5633	6337	6689	7745	7745	8801	8801	9858	10562
		S.C.		1448	2106	2106	2369	2500	2895	2895	3290	3290	3685	3948
				PARTING LOAD (kN)										
	REGULAR COUPLING			5843	6968	6767	7338	7723	8679	9080	9835	10036	11192	11963
	S.C. COUPLING			4888	5145	4888	5145	5403	5917	6432	6689	6946	7718	8232

		OUTSIDE DIA. (mm)	INSIDE DIA. (mm)	WEIGHT (kg)	JOINT EFFICIENCY (%)	30' JOINT MUD DISPLACEMENT (m^3)
COUPLING OUTSIDE DIAMETER	W	324.41	279.98	38.04	117	0.11466
	Wc	311.61	279.98	21.37	65	0.11253
COUPLING LENGTH (mm)	NL	332.49	The above information is for reference only. The information is subject to change or modification without notice. Please contact HSC for the latest information.			
MAKE UP LOSS (mm)	ML	141.96				